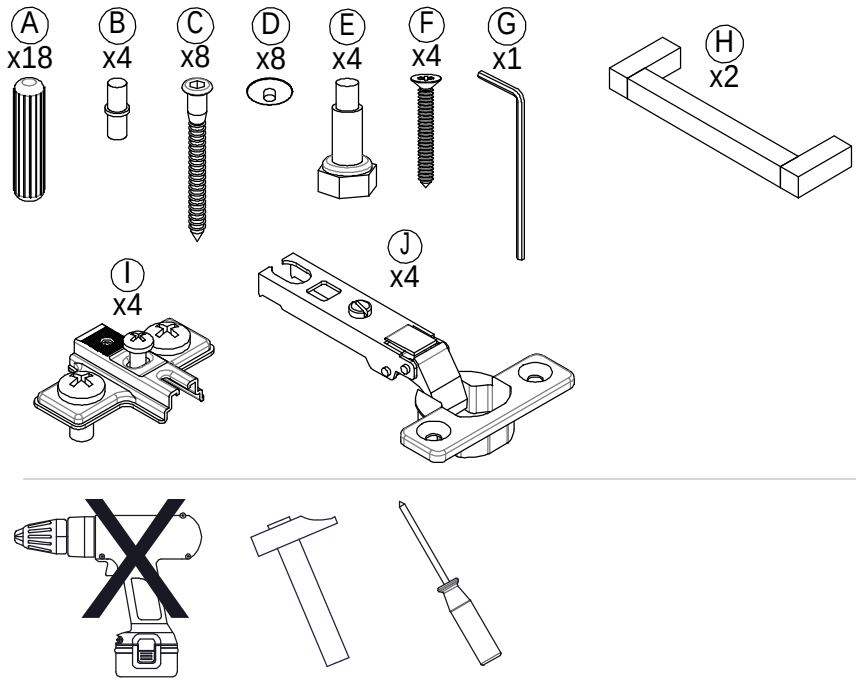

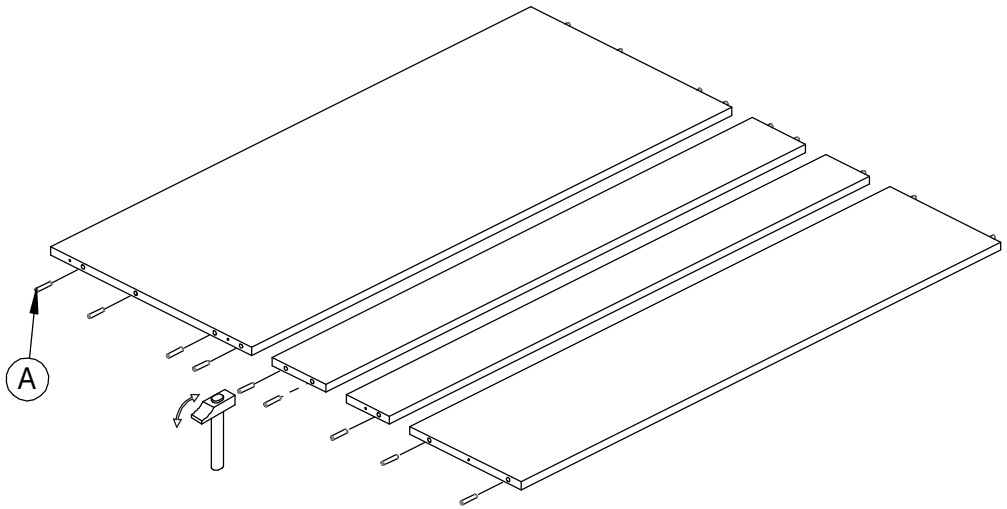

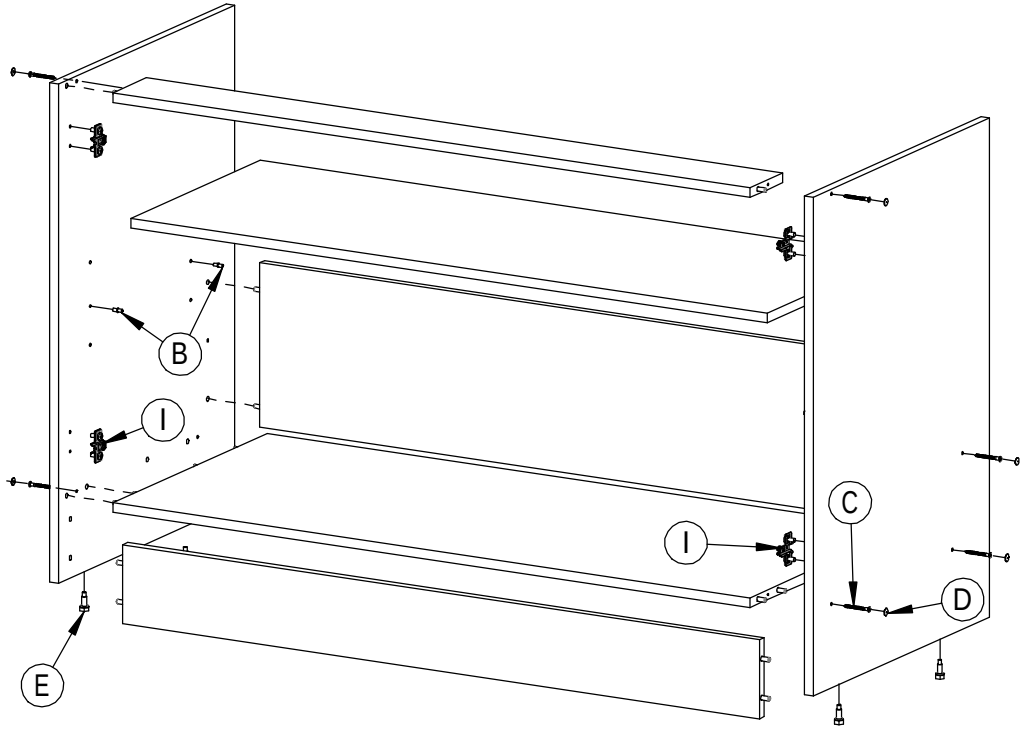

EMB3560100 (2/2)